MISSION COMPUTER CREDENZA 24 1/8" D X 66 1/8" W X 30" H			IPI
			DRAWN BY: BMK
DESCRIPTION: RENDER VIEW	QTY: X		
DIMENSION: XXXX	DATE 07/25/06	REV 00/00/00	SHEET 1 OF 3

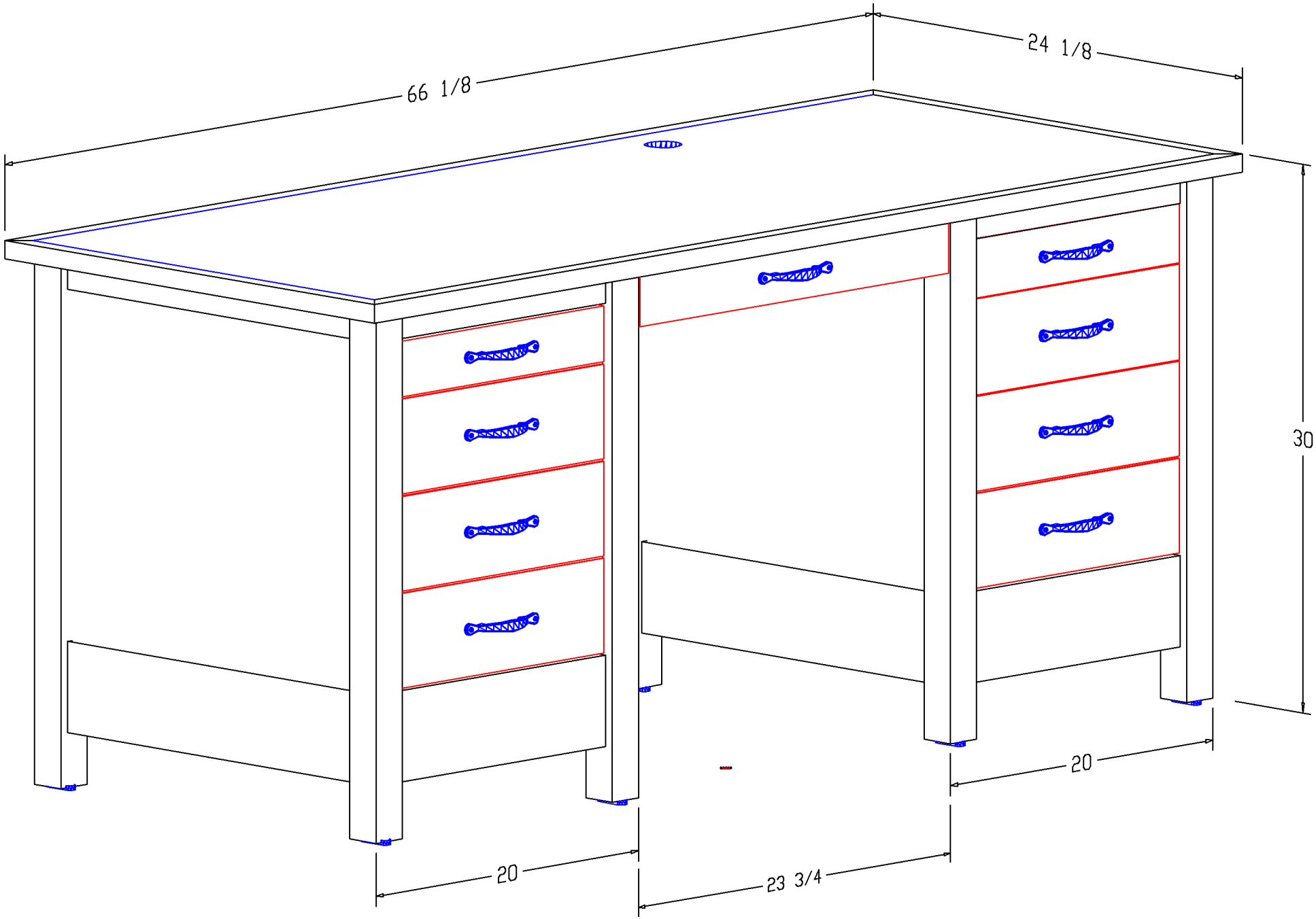

7/26/2006 7:02:40 AM	DESCRIPTION: ISO VIEW	QTY: X	MISSION COMPUTER CREDENZA 24 1/8" D X 66 1/8" W X 30" H
	DIMENSION: XXXX		DATE 07/25/06 REV 00/00/00 SHEET 2 OF 3

IPI

DRAWN BY: BMK

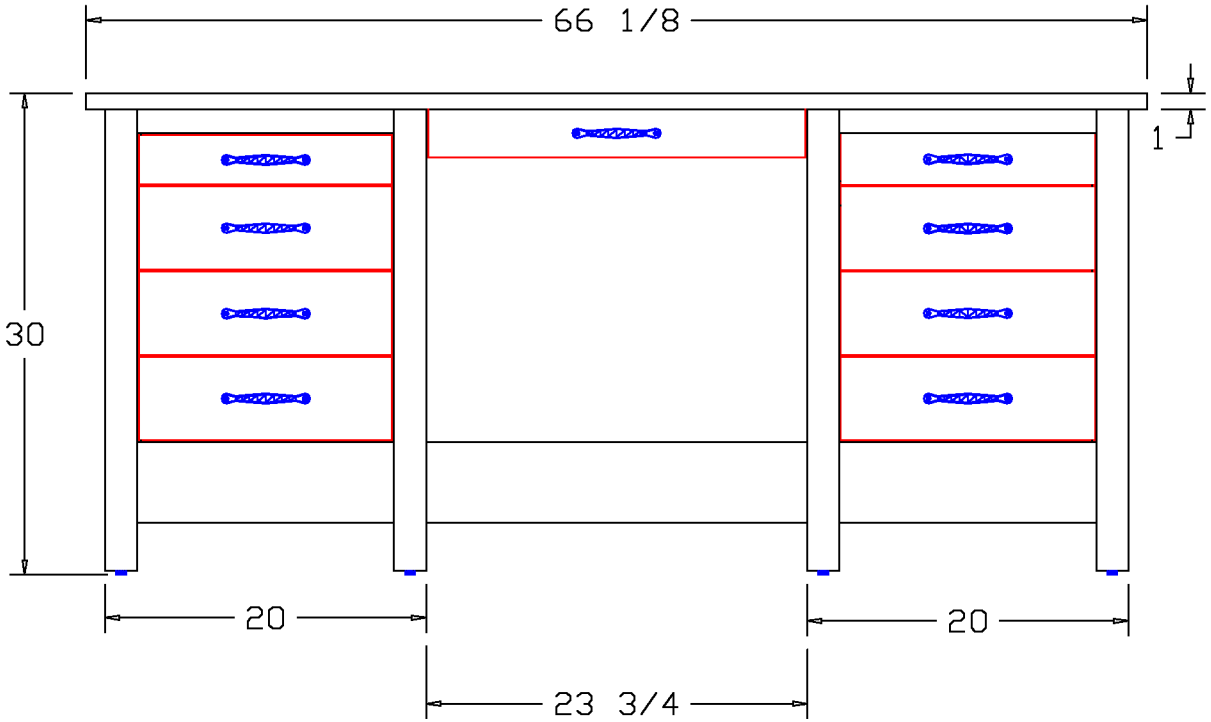

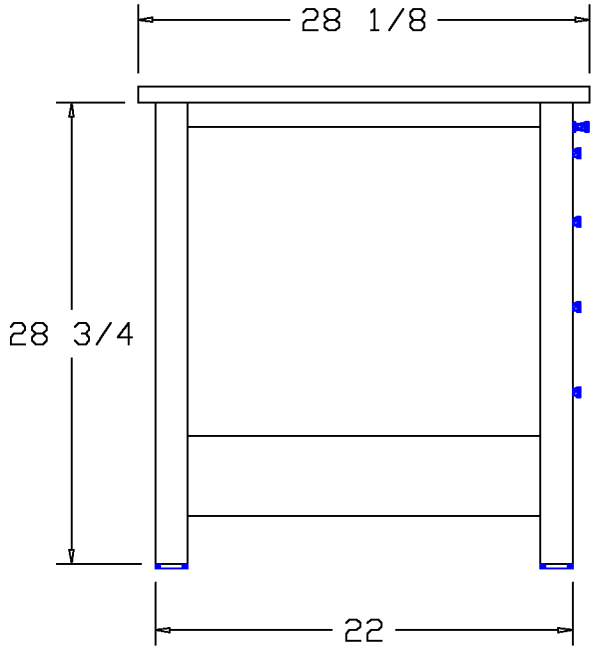

7/26/2006 7:02:45 AM	DESCRIPTION: FRONT, AND SIDE VIEW	QTY: X	MISSION COMPUTER CREDENZA 24 1/8"D X 66 1/8"W X 30"H
	DIMENSION: XXXX		DATE 07/25/06 · REV 00/00/00 · SHEET 3 OF 3

IPI

DRAWN BY: BMK