Iowa Prison Industries
Custom Wood Shop
Anamosa, IA

- FOR CUSTOMER REVIEW -
Not to be duplicated or shared without
written permission from Plant Manager

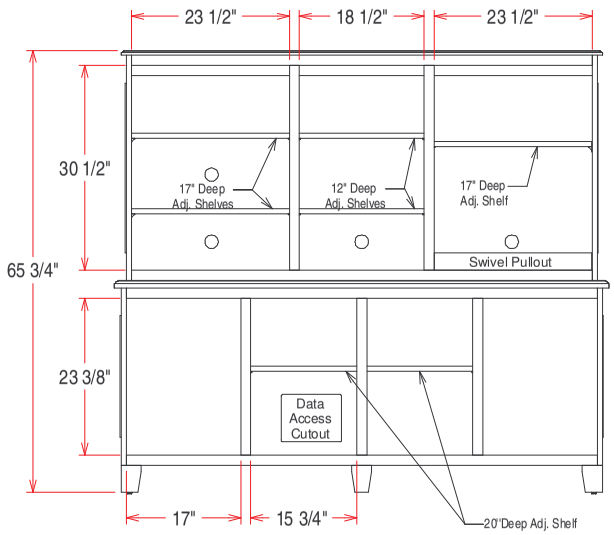

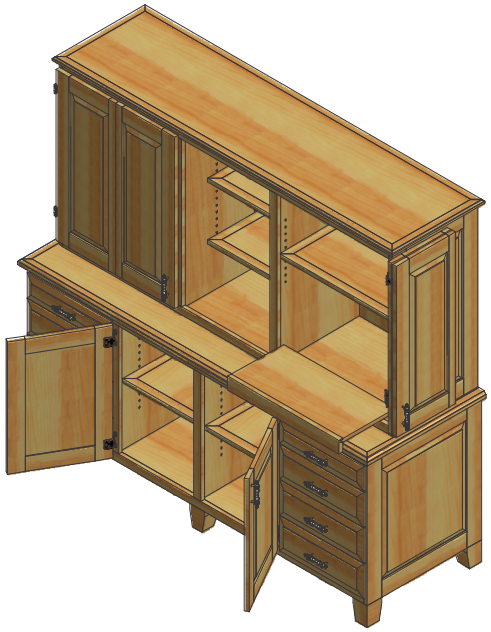

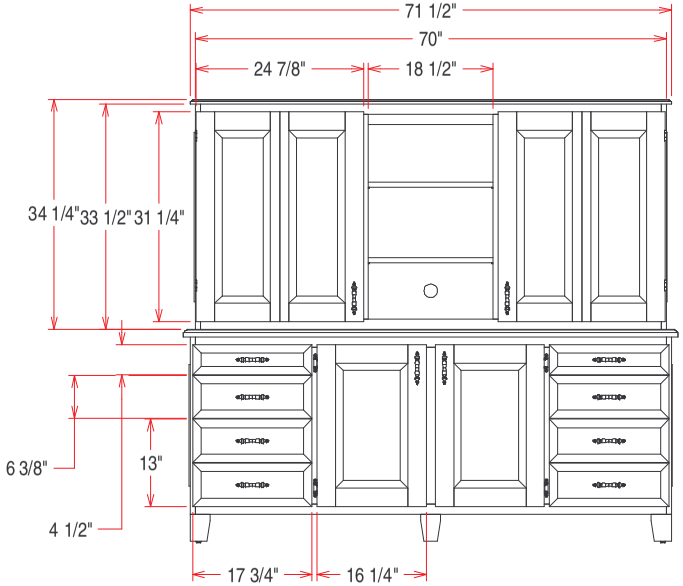

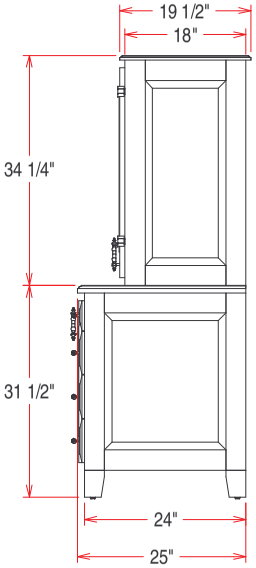

Referral Number: 67-05-3	73-1/2"W x 65-3/4"H x 25"D		Weight: ≈ 400 LBS	Stain:	Solid Red Oak Oak Veneer Plyd. 20" FE & Std. Dwr. Slides Swivel Pullout
Requested By:		Salesperson: CWS		Laminate: N/A	
Oak Director's Credenza & Hutch					
FCW: 2686	Drawn By: Jon August	8/31/2006	Sheet 1 of 1	Fabric: N/A	
Approved By:		Date Approved:			

**Annotate changes regarding overall dimensions, location of accessories, etc.
If no changes are required, please sign & date indicating approval of this design.

Return by fax or e-mail.

*STAIN & FINISH OTHER THAN STOCK REQUIRES A $40.00 PER GALLON INCREASE IN COST.

THIS MAY REQUIRE A DELAY IN DELIVERY OF UP TO 30 DAYS.