Iowa Prison Industries
Custom Wood Shop
Anamosa, IA

- FOR CUSTOMER REVIEW -
Not to be duplicated or shared without
written permission from Plant Manager

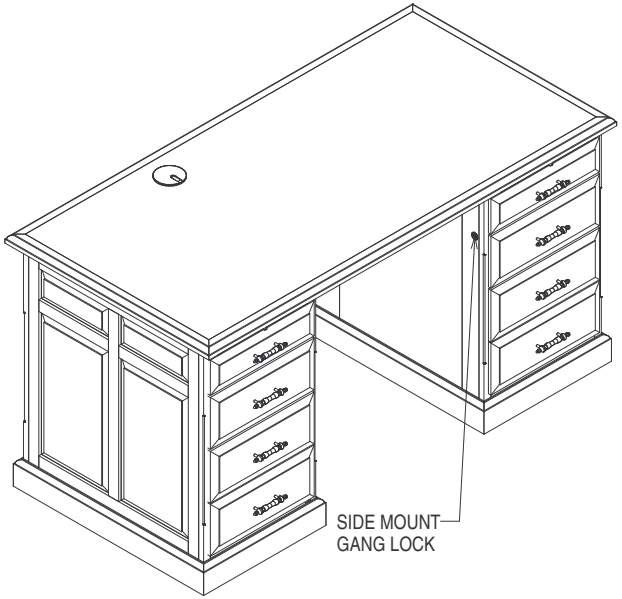

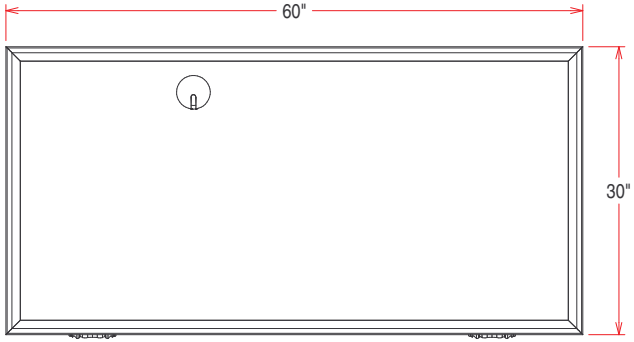

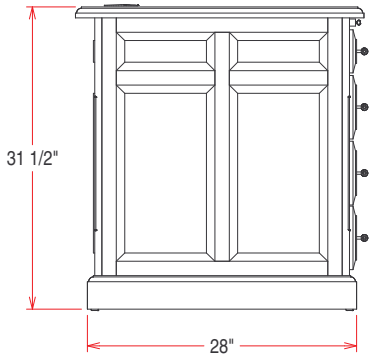

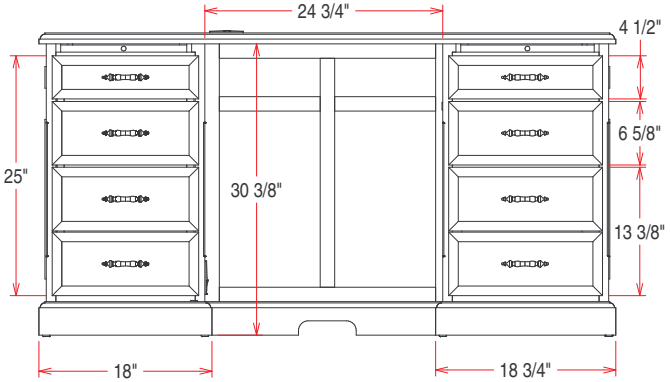

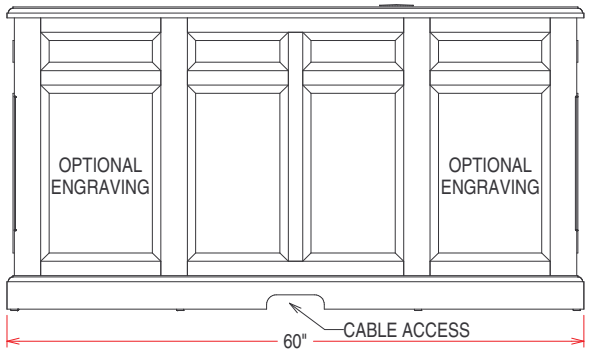

Referral Number: 67-05-1	60"W x 30"D x 31-1/2"H		Weight: 247 lbs
Requested By: Open		Salesperson: CWS	
Oak Director's Computer Desk	(FG - FDESKCOMPDIR)		
FCW: 2683	Drawn By: L. Jackson	6/26/2007	Sheet 1 of 1
Approved By:		Date Approved:	

Stain: Customer Selection

Laminate: N/A

Fabric: N/A

Solid Red Oak
Oak Veneer MDF
FE & Std Dwr Slides
3" Grommets

OPTIONS:
Articulating Keyboard
Drop-Front Keyboard
Rear Panel Engraving

**Annotate changes regarding overall dimensions, location of accessories, etc.
If no changes are required, please sign & date indicating approval of this design.

Return by fax or e-mail.

*STAIN & FINISH OTHER THAN STOCK REQUIRES A $40.00 PER GALLON INCREASE IN COST.

THIS MAY REQUIRE A DELAY IN DELIVERY OF UP TO 30 DAYS.