Iowa Prison Industries
Custom Wood Shop
Anamosa, IA

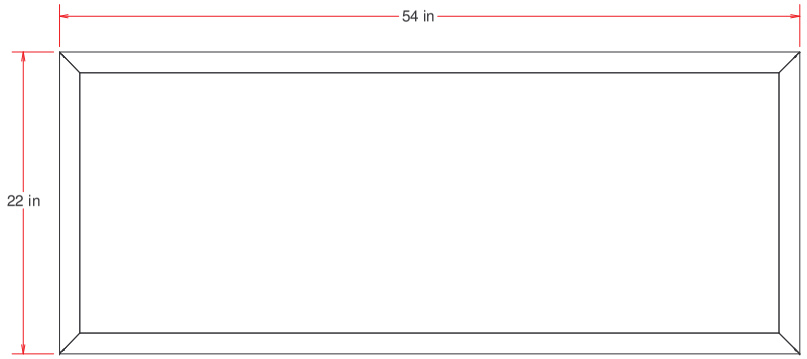

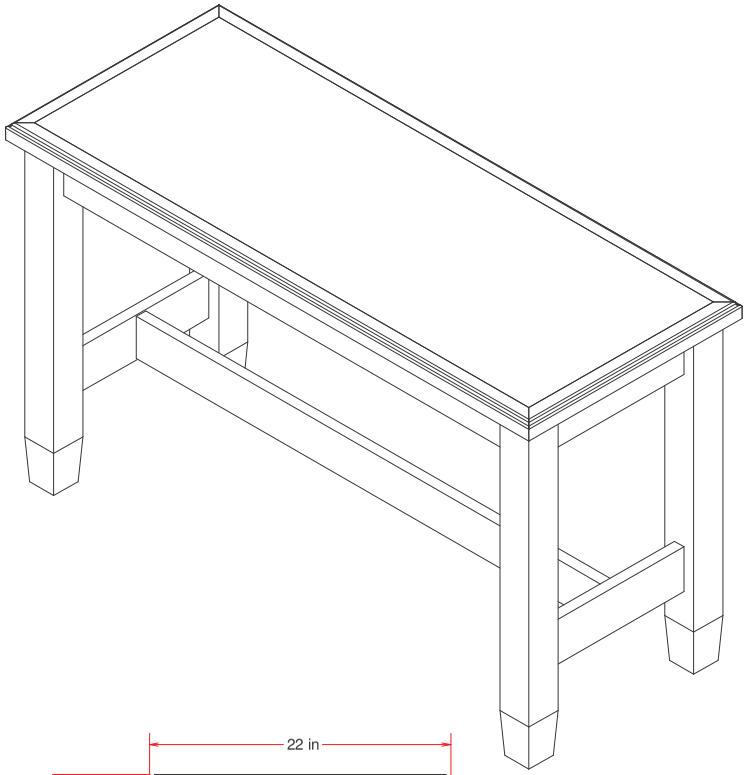

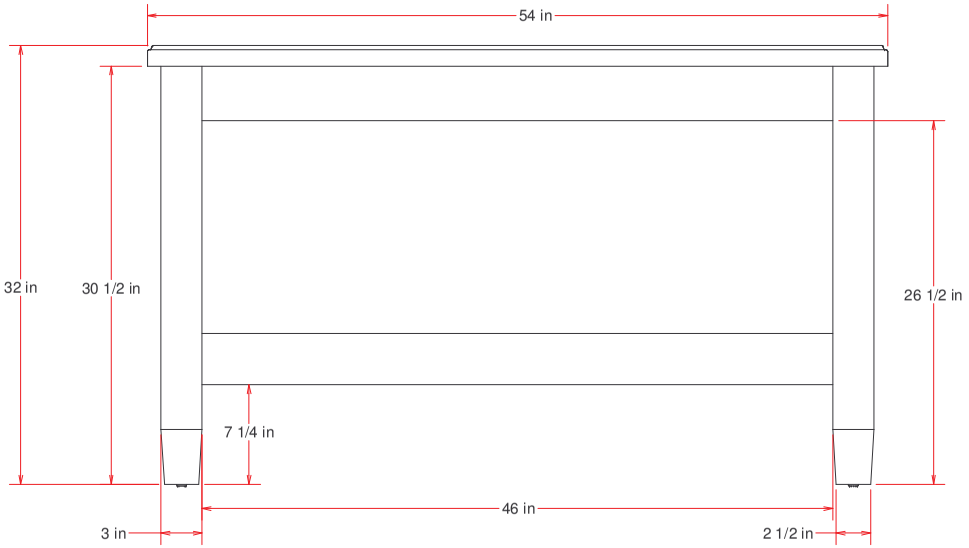

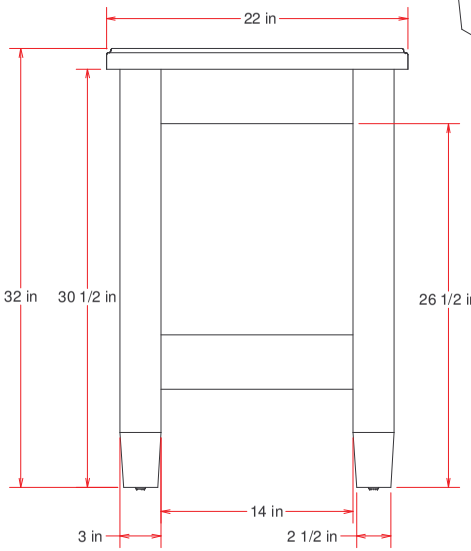

MATERIAL

Solid Red Oak wood
3/4" Red Oak plywood
Dowels
Metal floor glides
Tabletop fasteners

INDICATE PREFERENCE:

Stain Choice - Custom Wood Stock »
_____

Other » _____

Laminate - Color & Type »
_____

FCW2263	IPI Showroom		Bob Fairfax
8/25/2004	Customer Referral Number »50-04 34-37	TABLCX0823041704	Kraig L. Behning

**Annotate changes regarding overall dimensions, location of accessories, etc.
If no changes are required, please sign & date indicating approval of this design.

Return by fax or e-mail.

*STAIN & FINISH OTHER THAN STOCK REQUIRES A $30.00 PER GALLON INCREASE IN COST.

THIS MAY REQUIRE A DELAY IN DELIVERY OF UP TO 30 DAYS.

Communion Table | Weight: ~74 LBS | 1 of 2

- FOR CUSTOMER REVIEW -
Not to be duplicated or shared without written permission from Plant Manager

Approved By:

Date Approved:

Iowa Prison Industries
Custom Wood Shop
Anamosa, IA

MATERIAL

Solid Red Oak wood
3/4" Red Oak plywood
Dowels
Metal floor glides
Tabletop fasteners

INDICATE PREFERENCE:

Stain Choice - Custom Wood Stock »
_____

Other » _____

Laminate - Color & Type »
_____

FCW2263	IPI Showroom		Bob Fairfax
8/25/2004	Customer Referral Number »50-04 34-37	TABLCX0823041704	Kraig L. Behning

**Annotate changes regarding overall dimensions, location of accessories, etc.
If no changes are required, please sign & date indicating approval of this design.

Return by fax or e-mail.

*STAIN & FINISH OTHER THAN STOCK REQUIRES A $30.00 PER GALLON INCREASE IN COST.

THIS MAY REQUIRE A DELAY IN DELIVERY OF UP TO 30 DAYS.

Communion Table	Weight: ~74 LBS	2 of 2
- FOR CUSTOMER REVIEW - Not to be duplicated or shared without written permission from Plant Manager		
Approved By:		
Date Approved:		