Iowa Prison Industries
Custom Wood Shop
Anamosa, IA

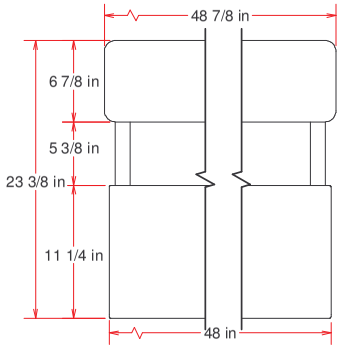

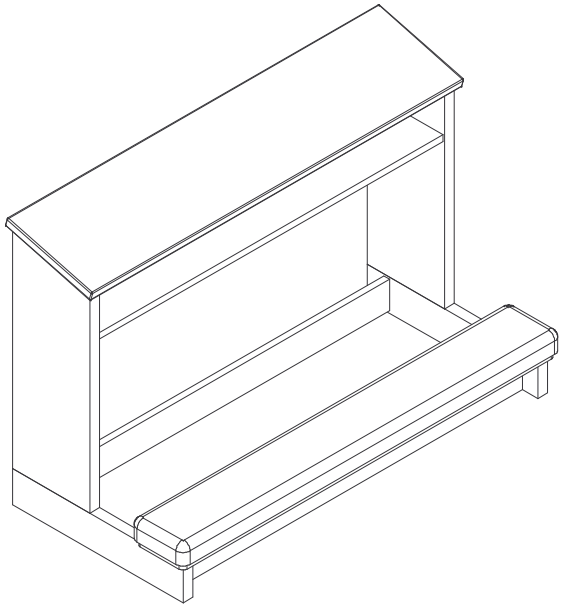

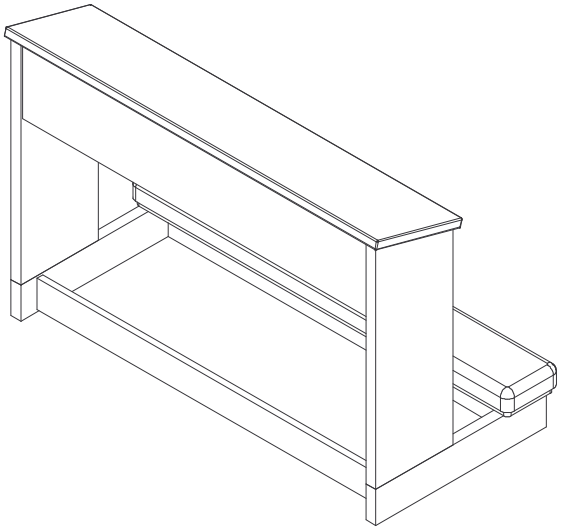

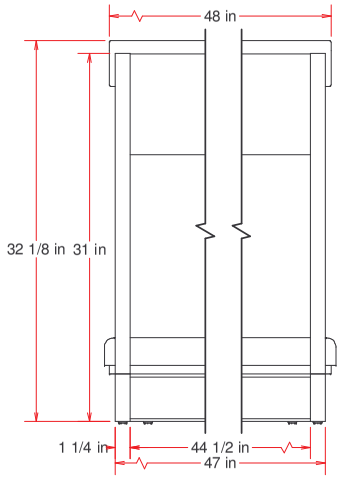

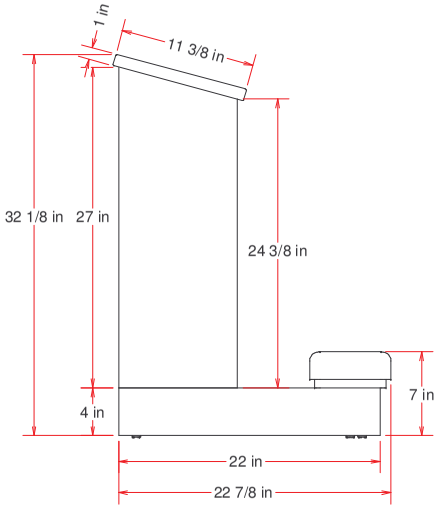

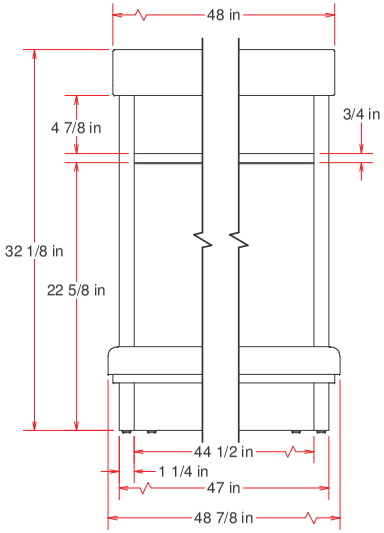

MATERIAL
Solid Red Oak wood 3/4" ACX plywood Dowels Fabric

INDICATE PREFERENCE:

Stain Choice - Custom Wood Stock » _____

Other » _____

Laminate - Color & Type » _____

FCW2255	IPI Showroom		Bob Fairfax
8/27/2004	Customer Referral Number »50-04 26-37	DESKCX0823041638	Kraig L. Behning
**Annotate changes regarding overall dimensions, location of accessories, etc. If no changes are required, please sign & date indicating approval of this design. Return by fax or e-mail.	*STAIN & FINISH OTHER THAN STOCK REQUIRES A $30.00 PER GALLON INCREASE IN COST. THIS MAY REQUIRE A DELAY IN DELIVERY OF UP TO 30 DAYS.	Double Prayer Desk, Open — Weight: ~59 LBS — 1 of 2 **- FOR CUSTOMER REVIEW -** Not to be duplicated or shared without written permission from Plant Manager Approved By: Date Approved:	

Iowa Prison Industries
Custom Wood Shop
Anamosa, IA

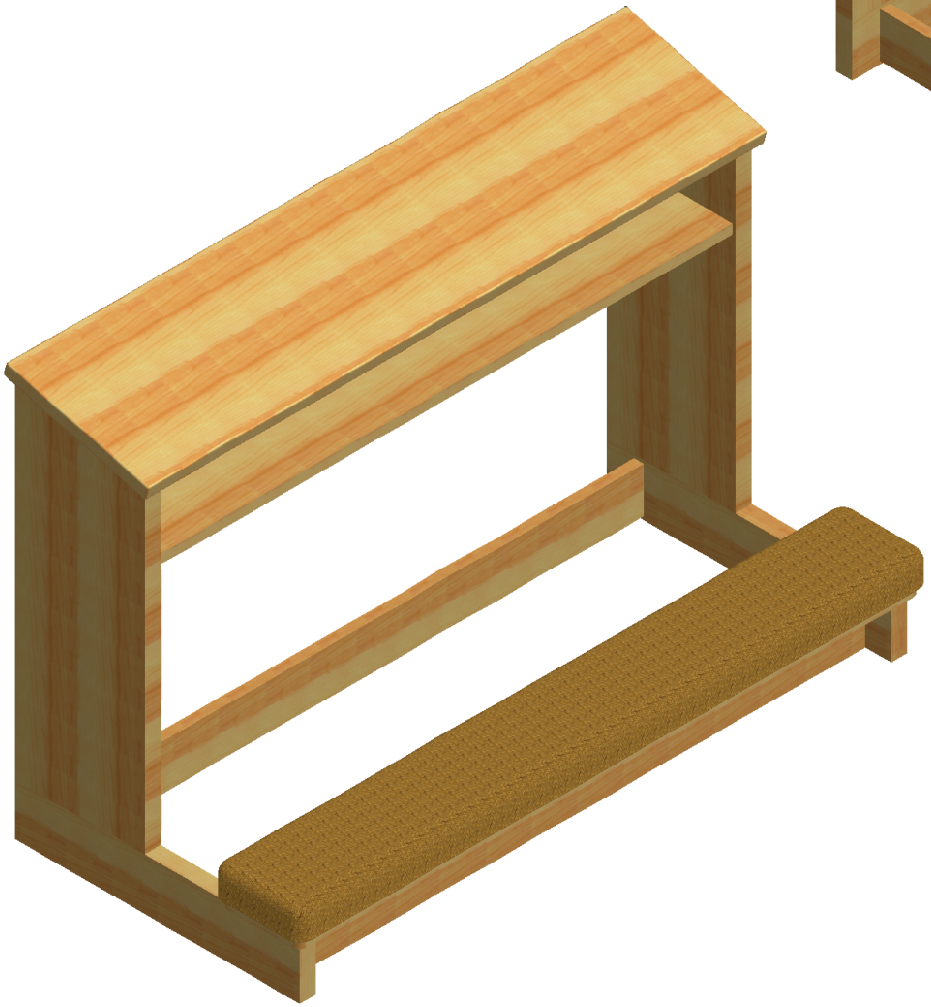

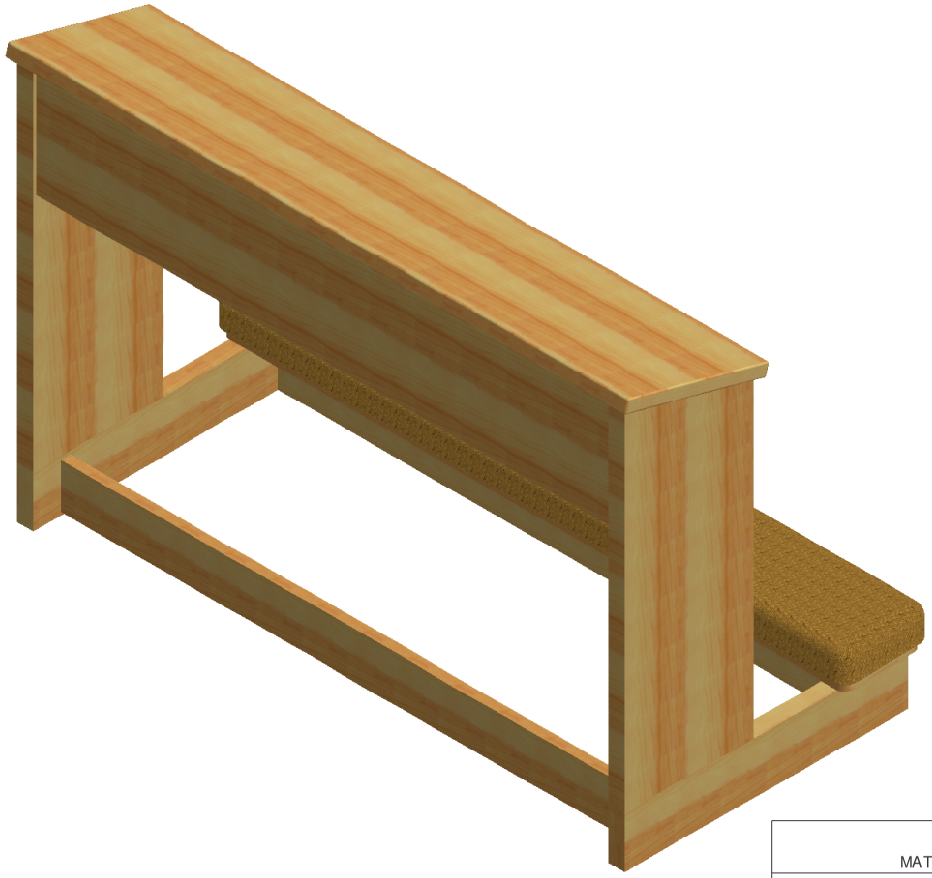

MATERIAL

Solid Red Oak wood
3/4" ACX plywood
Dowels
Fabric

INDICATE PREFERENCE:

Stain Choice - Custom Wood Stock » _____

Other » _____

Laminate - Color & Type » _____

FCW2255	IPI Showroom		Bob Fairfax
8/27/2004	Customer Referral Number »50-04 26-37	DESKCX0823041638	Kraig L. Behning
**Annotate changes regarding overall dimensions, location of accessories, etc. If no changes are required, please sign & date indicating approval of this design. Return by fax or e-mail.	*STAIN & FINISH OTHER THAN STOCK REQUIRES A $30.00 PER GALLON INCREASE IN COST. THIS MAY REQUIRE A DELAY IN DELIVERY OF UP TO 30 DAYS.	Double Prayer Desk, Open	Weight: ~59 LBS / 2 of 2
		- FOR CUSTOMER REVIEW - Not to be duplicated or shared without written permission from Plant Manager	
		Approved By:	
		Date Approved:	