Iowa Prison Industries
Custom Wood Shop
Anamosa, IA

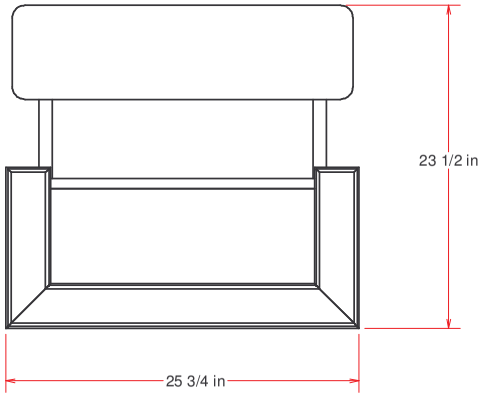

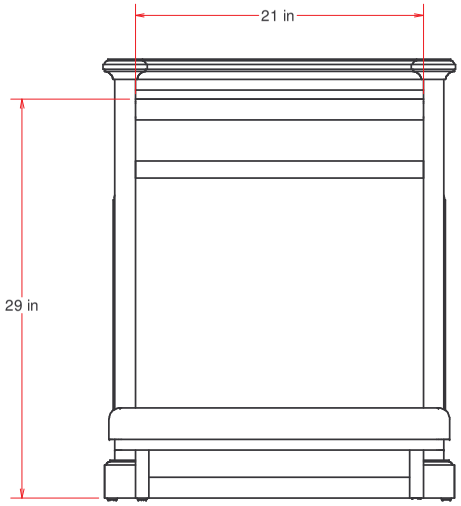

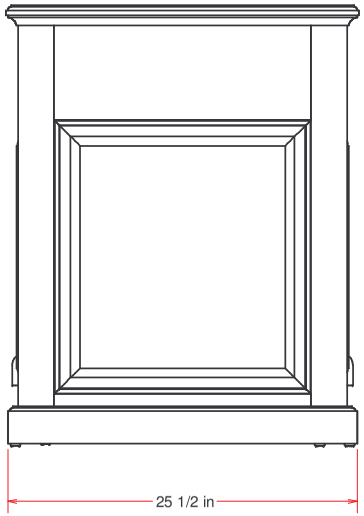

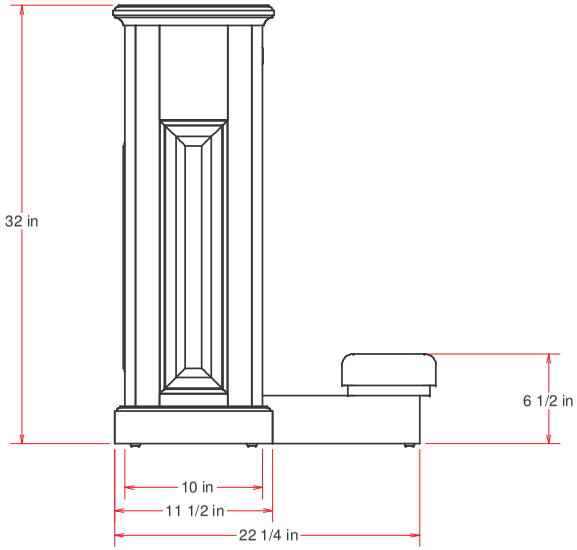

MATERIAL

3/4" Oak Plywood
Solid Red Oak

Fabric - Customer Choice

Stain Choice - Custom Wood Stock »

Other »

Laminate - Color & Type »

FCW2254	IPI Showroom			Bob Fairfax
9/2/2004	Customer Referral Number »	50-04 25-37	DESKCX0823041636	L. Jackson
**Annotate changes regarding overall dimensions, location of accessories, etc. If no changes are required, please sign & date indicating approval of this design. Return by fax or e-mail.	*STAIN & FINISH OTHER THAN STOCK REQUIRES A $30.00 PER GALLON INCREASE IN COST. THIS MAY REQUIRE A DELAY IN DELIVERY OF UP TO 30 DAYS.	Single Prayer Desk, Closed	Weight: 70 lbs	1 of 2
		- FOR CUSTOMER REVIEW - Not to be duplicated or shared without written permission from Plant Manager		
		Approved By:		
		Date Approved:		

Iowa Prison Industries
Custom Wood Shop
Anamosa, IA

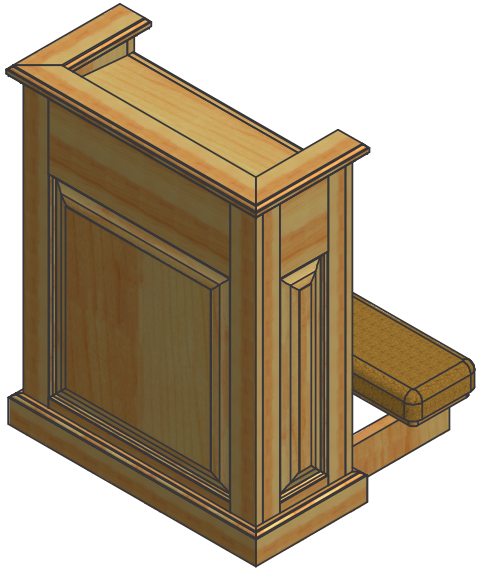

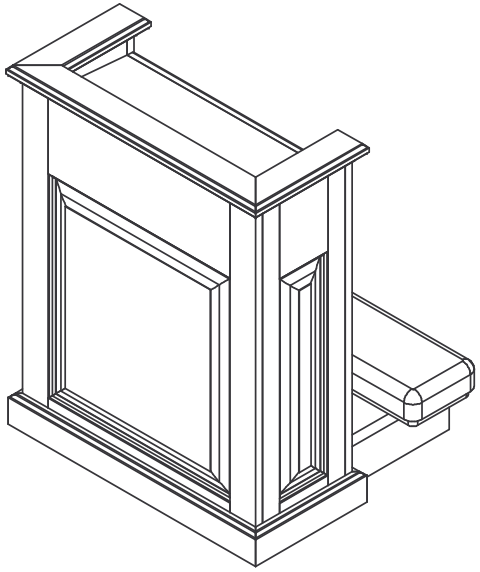

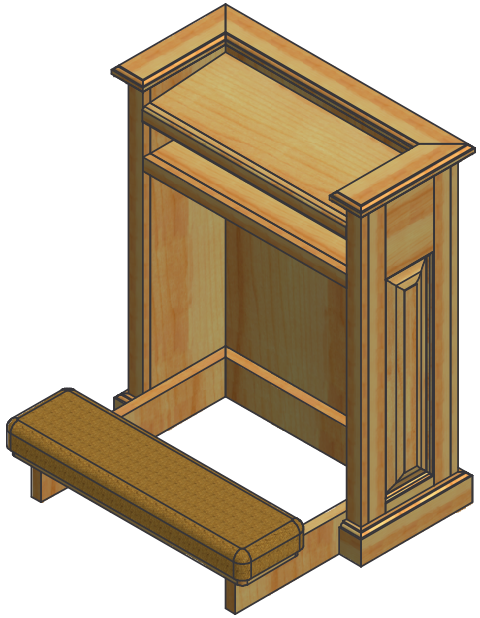

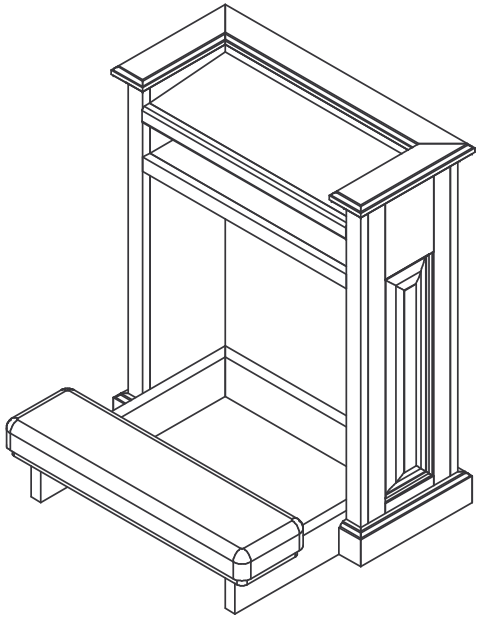

MATERIAL

Stain Choice - Custom Wood Stock »

Other »

Laminate - Color & Type »

FCW2254	IPI Showroom			Bob Fairfax
9/2/2004	Customer Referral Number »	50-04 25-37	DESKCX0823041636	L. Jackson
**Annotate changes regarding overall dimensions, location of accessories, etc. If no changes are required, please sign & date indicating approval of this design. Return by fax or e-mail.	*STAIN & FINISH OTHER THAN STOCK REQUIRES A $30.00 PER GALLON INCREASE IN COST. THIS MAY REQUIRE A DELAY IN DELIVERY OF UP TO 30 DAYS.	Single Prayer Desk, Closed	Weight: 70 lbs	2 of 2
		- FOR CUSTOMER REVIEW - Not to be duplicated or shared without written permission from Plant Manager		
		Approved By:		
		Date Approved:		