Iowa Prison Industries
Custom Wood Shop
Anamosa, IA

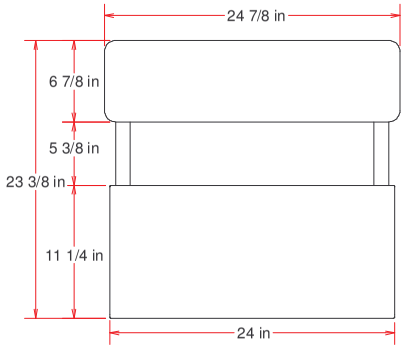

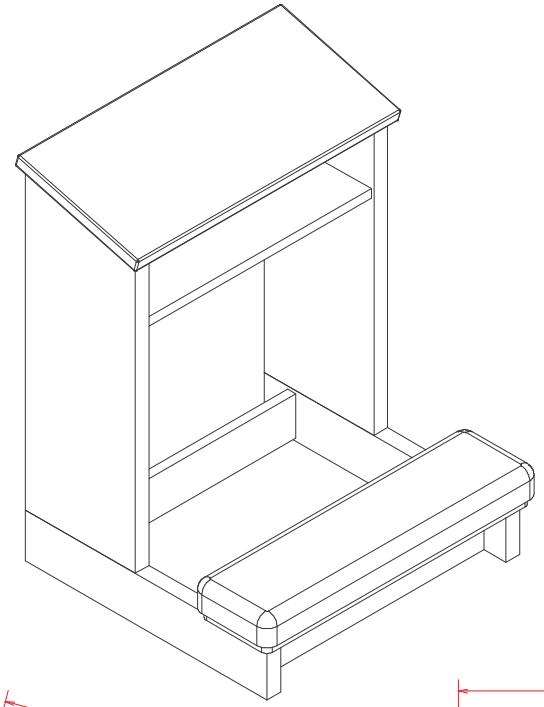

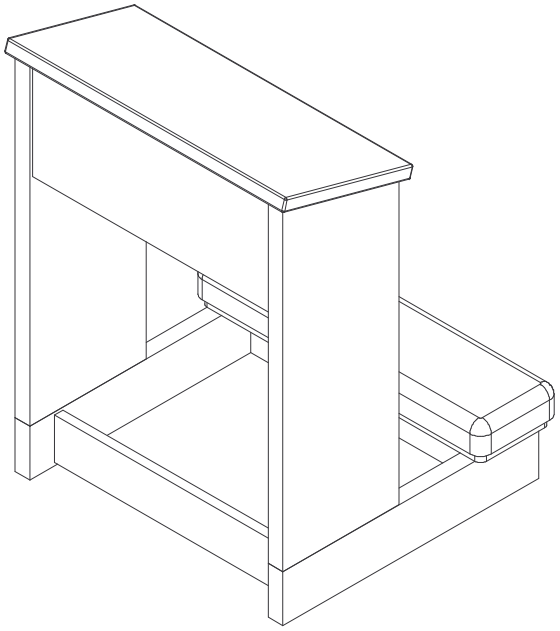

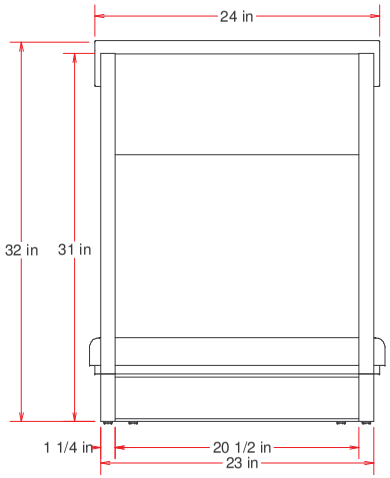

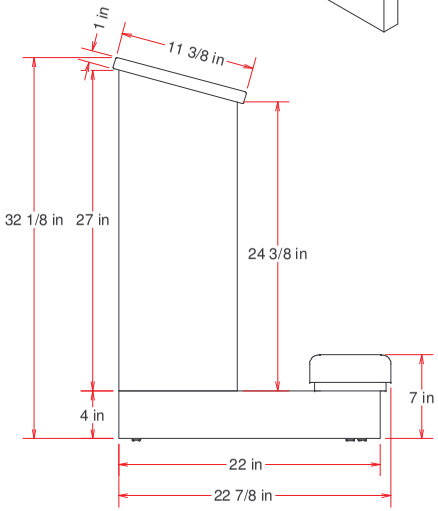

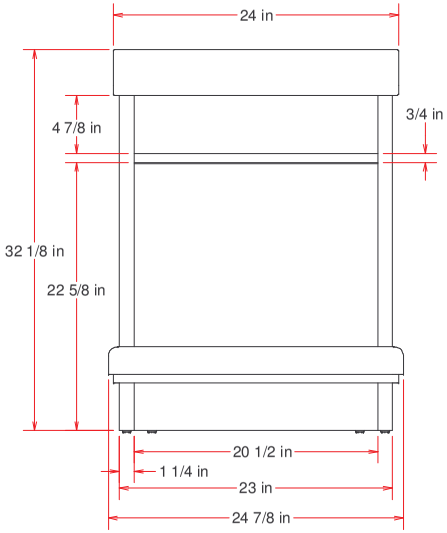

MATERIAL

Solid Red Oak wood
3/4" ACX plywood
Dowels
Fabric

INDICATE PREFERENCE:

Stain Choice - Custom Wood Stock »
_____

Other » _____

Laminate - Color & Type »
_____

FCW2253	IPI Showroom		Bob Fairfax
8/27/2004	Customer Referral Number »50-04 24-37	DESKCX0823041634	Kraig L. Behning
	Single Prayer Desk, Open	Weight: ~38 LBS	1 of 2

**Annotate changes regarding overall dimensions, location of accessories, etc.
If no changes are required, please sign & date indicating approval of this design.

Return by fax or e-mail.

*STAIN & FINISH OTHER THAN STOCK REQUIRES A $30.00 PER GALLON INCREASE IN COST.

THIS MAY REQUIRE A DELAY IN DELIVERY OF UP TO 30 DAYS.

- FOR CUSTOMER REVIEW -
Not to be duplicated or shared without written permission from Plant Manager

Approved By:

Date Approved:

Iowa Prison Industries
Custom Wood Shop
Anamosa, IA

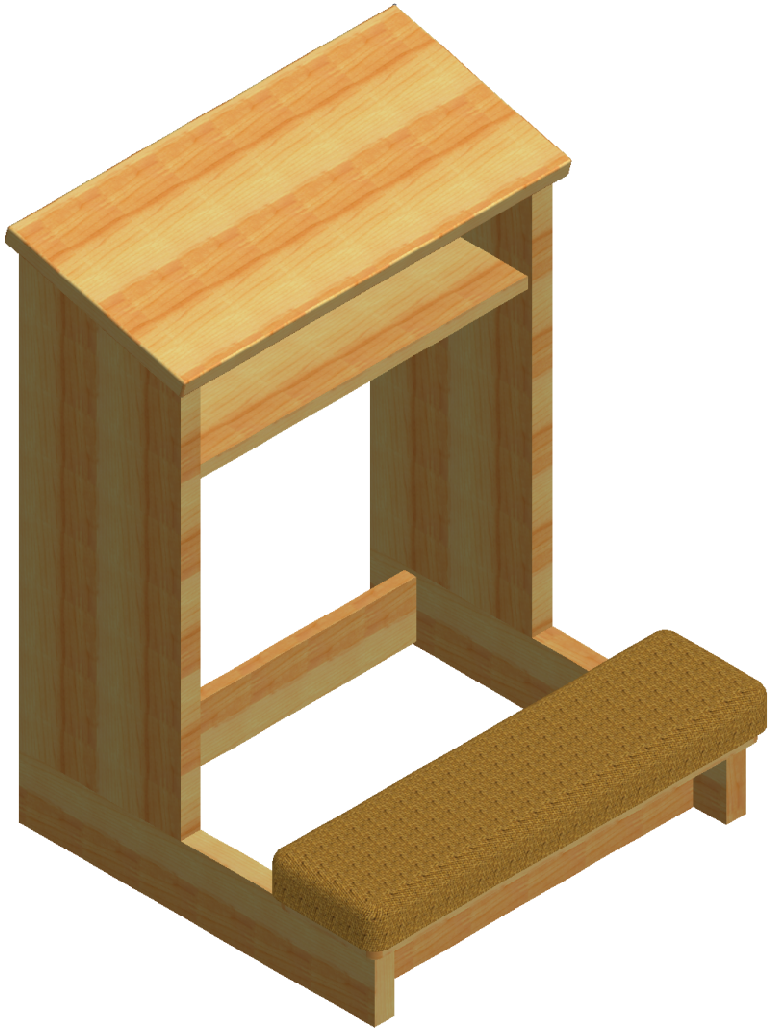

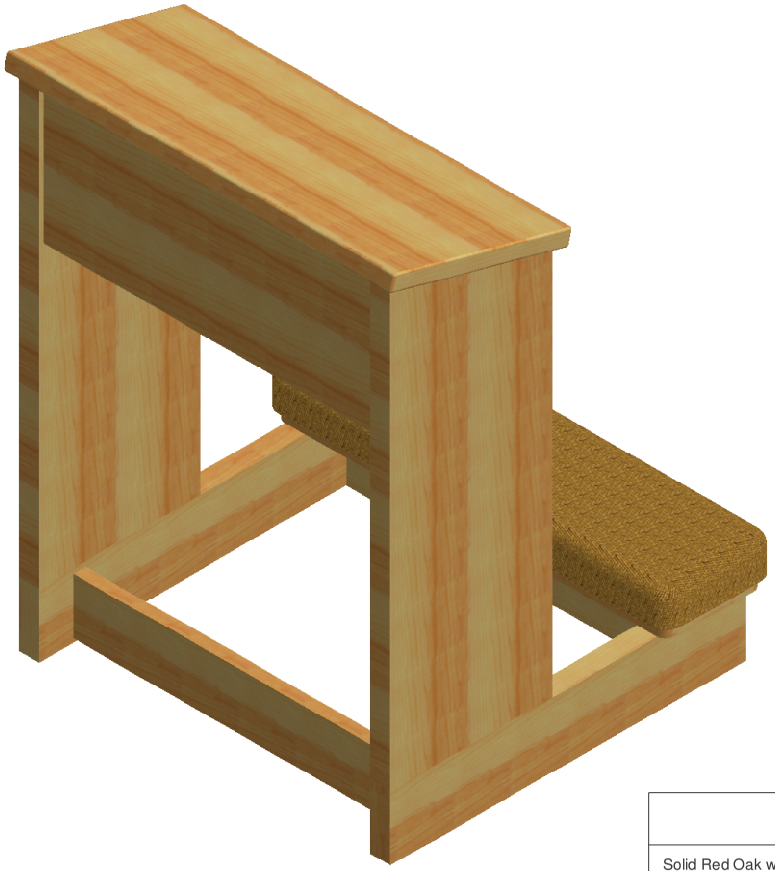

MATERIAL

Solid Red Oak wood
3/4" ACX plywood
Dowels
Fabric

INDICATE PREFERENCE:

Stain Choice - Custom Wood Stock »
_____

Other » _____

Laminate - Color & Type »
_____

FCW2253	IPI Showroom		Bob Fairfax
8/27/2004	Customer Referral Number »50-04 24-37	DESKCX0823041634	Kraig L. Behning
**Annotate changes regarding overall dimensions, location of accessories, etc. If no changes are required, please sign & date indicating approval of this design. Return by fax or e-mail.	*STAIN & FINISH OTHER THAN STOCK REQUIRES A $30.00 PER GALLON INCREASE IN COST. THIS MAY REQUIRE A DELAY IN DELIVERY OF UP TO 30 DAYS.	Single Prayer Desk, Open	Weight: ~38 LBS 2 of 2
		- FOR CUSTOMER REVIEW - Not to be duplicated or shared without written permission from Plant Manager	
		Approved By:	
		Date Approved:	