Iowa Prison Industries
Custom Wood Shop
Anamosa, IA

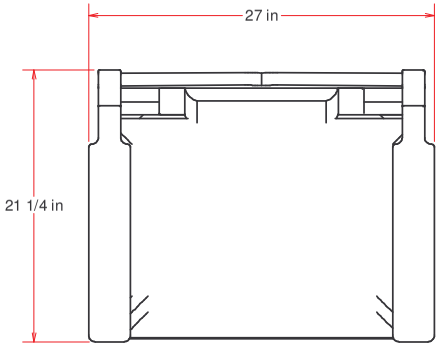

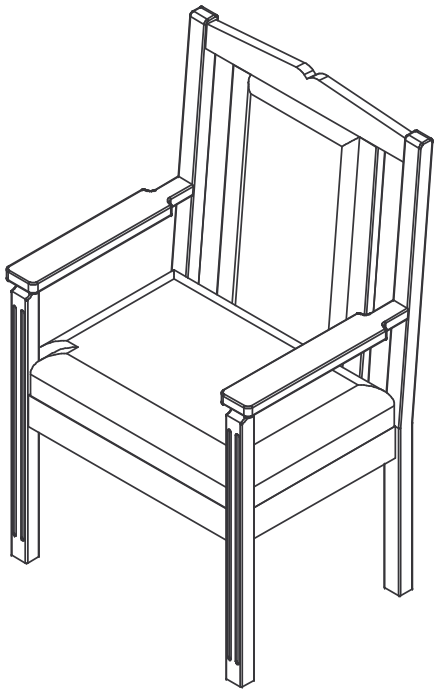

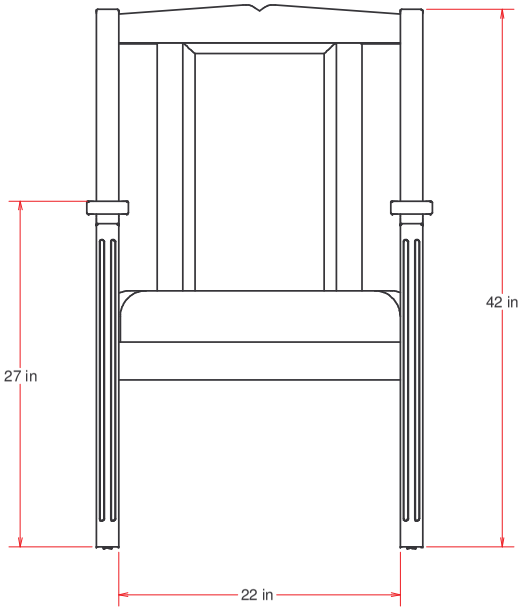

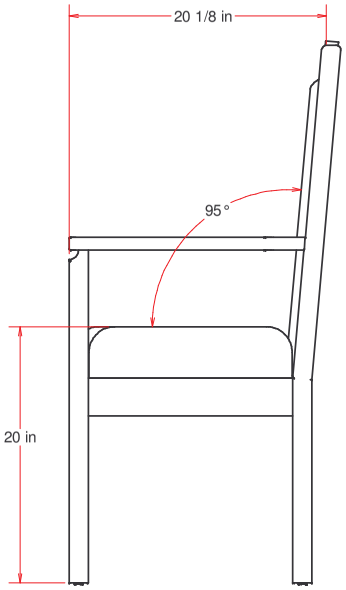

MATERIAL

Solid Red Oak
3/4" Oak Plywood
1" Foam - Back\
4" Foam - Seat
Metal Floor Glides

Fabric - Type & Color
Customer Choice

Stain Choice - Custom Wood Stock » _____

Other » _____

Laminate - Color & Type » _____

FCW2250	IPI Showroom			Bob Fairfax
9/8/2004	Customer Referral Number »	50-04 21-37	CHCHCX0823041635	L. Jackson
**Annotate changes regarding overall dimensions, location of accessories, etc. If no changes are required, please sign & date indicating approval of this design. Return by fax or e-mail.	*STAIN & FINISH OTHER THAN STOCK REQUIRES A $30.00 PER GALLON INCREASE IN COST. THIS MAY REQUIRE A DELAY IN DELIVERY OF UP TO 30 DAYS.	Side Pulpit Chair, Padded	Weight: 31 lbs	1 of 1
		- FOR CUSTOMER REVIEW - Not to be duplicated or shared without written permission from Plant Manager		
		Approved By:		
		Date Approved:		