Iowa Prison Industries
Custom Wood Shop
Anamosa, IA

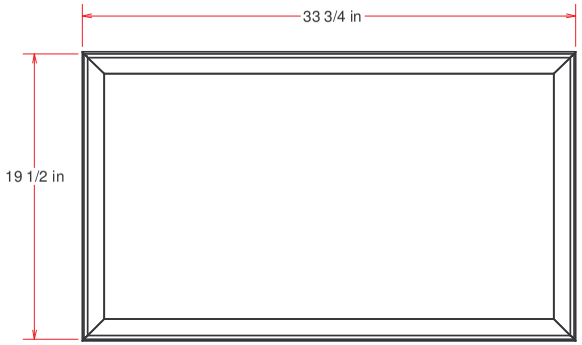

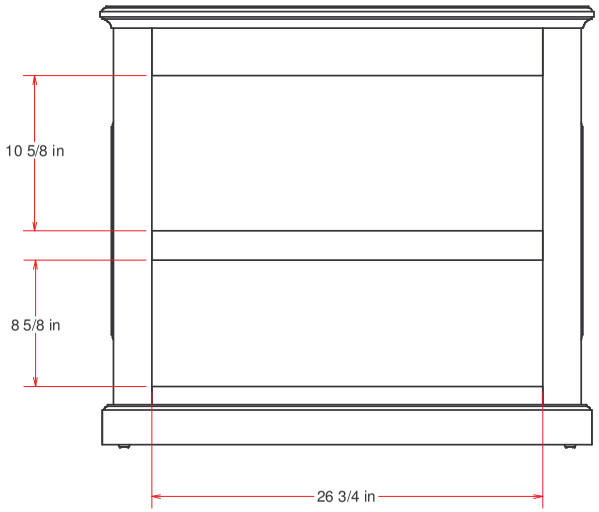

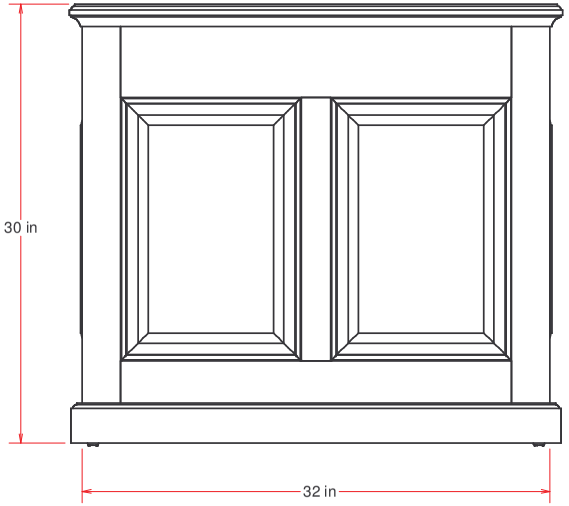

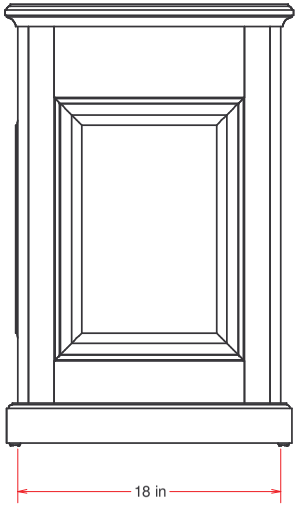

MATERIAL

3/4" Oak Veneer Plywood
Solid Red Oak
Metal Floor Glides

Optional engraving on
raised panels.

Stain Choice - Custom Wood Stock » _____

Other » _____

Laminate - Color & Type » _____

FCW2244	IPI Showroom			Bob Fairfax
8/25/2004	Customer Referral Number »	50-04 15-37	TABLCX0824040726	L. Jackson
**Annotate changes regarding overall dimensions, location of accessories, etc. If no changes are required, please sign & date indicating approval of this design. Return by fax or e-mail.	*STAIN & FINISH OTHER THAN STOCK REQUIRES A $30.00 PER GALLON INCREASE IN COST. THIS MAY REQUIRE A DELAY IN DELIVERY OF UP TO 30 DAYS.	Offering Table, Ornate	Weight: 115 lbs	1 of 2
		- FOR CUSTOMER REVIEW - Not to be duplicated or shared without written permission from Plant Manager		
		Approved By:		
		Date Approved:		

Iowa Prison Industries
Custom Wood Shop
Anamosa, IA

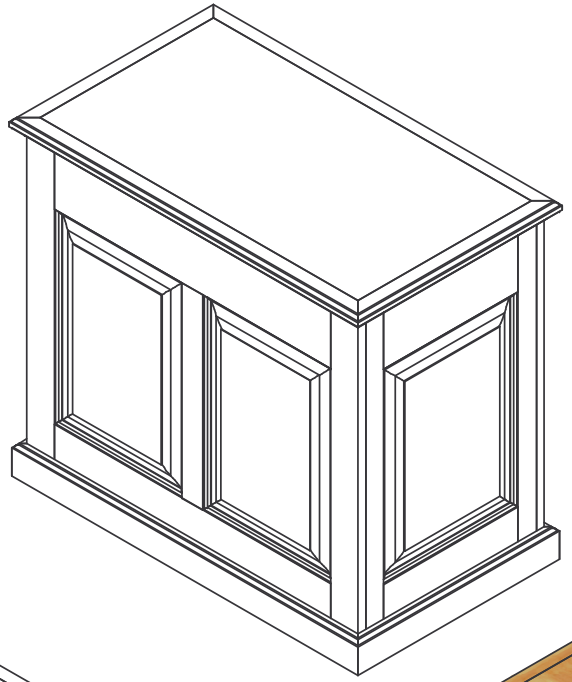

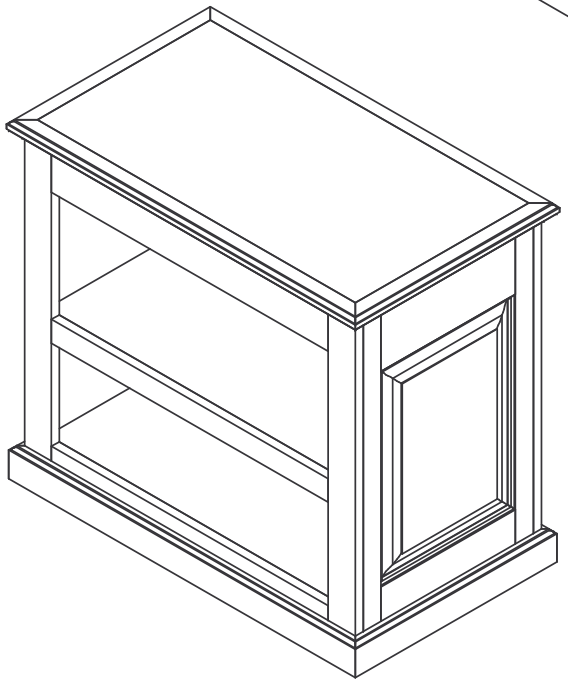

MATERIAL

Stain Choice - Custom Wood Stock »

Other »

Laminate - Color & Type »

FCW2244	IPI Showroom			Bob Fairfax
8/25/2004	Customer Referral Number »	50-04 15-37	TABLCX0824040726	L. Jackson
**Annotate changes regarding overall dimensions, location of accessories, etc. If no changes are required, please sign & date indicating approval of this design. Return by fax or e-mail.	*STAIN & FINISH OTHER THAN STOCK REQUIRES A $30.00 PER GALLON INCREASE IN COST. THIS MAY REQUIRE A DELAY IN DELIVERY OF UP TO 30 DAYS.	Offering Table, Ornate	Weight: 115 lbs	2 of 2
		- FOR CUSTOMER REVIEW - Not to be duplicated or shared without written permission from Plant Manager		
		Approved By:		
		Date Approved:		