Iowa Prison Industries
Custom Wood Shop
Anamosa, IA

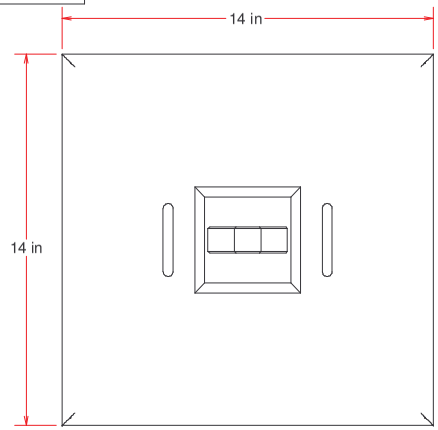

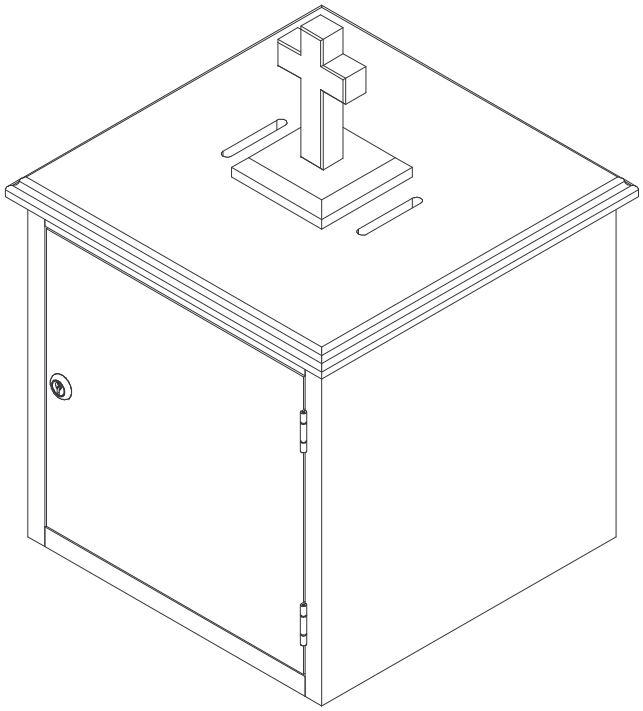

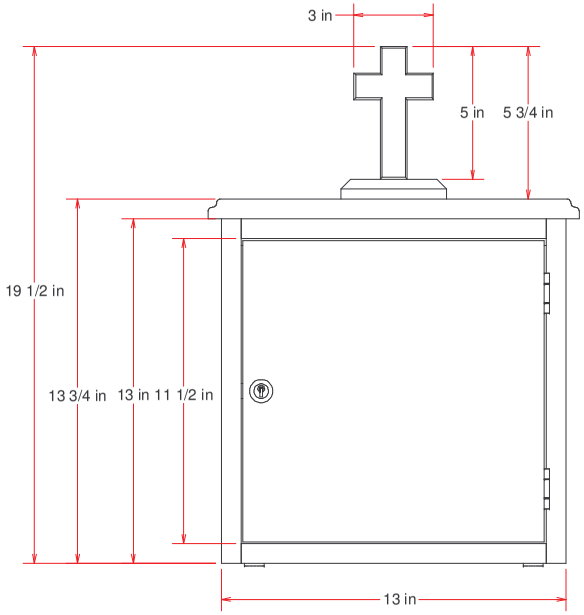

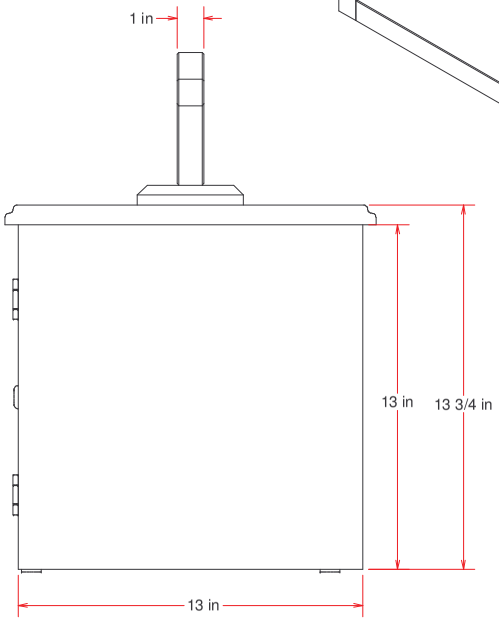

MATERIAL

Solid Red Oak wood
Felt pads
Threaded insert
Lock
Hinges

INDICATE PREFERENCE:

Stain Choice - Custom Wood Stock » _____

Other » _____

Laminate - Color & Type » _____

FCW2236	IPI Showroom		Bob Fairfax
8/31/2004	Customer Referral Number »50-04 07-37	CHSTCX0824040705	Kraig L. Behning
**Annotate changes regarding overall dimensions, location of accessories, etc. If no changes are required, please sign & date indicating approval of this design. Return by fax or e-mail.	*STAIN & FINISH OTHER THAN STOCK REQUIRES A $30.00 PER GALLON INCREASE IN COST. THIS MAY REQUIRE A DELAY IN DELIVERY OF UP TO 30 DAYS.	Tithe Box, Table-top	Weight: ~16 LBS — 1 of 2
		- FOR CUSTOMER REVIEW - Not to be duplicated or shared without written permission from Plant Manager	
		Approved By:	
		Date Approved:	

Iowa Prison Industries
Custom Wood Shop
Anamosa, IA

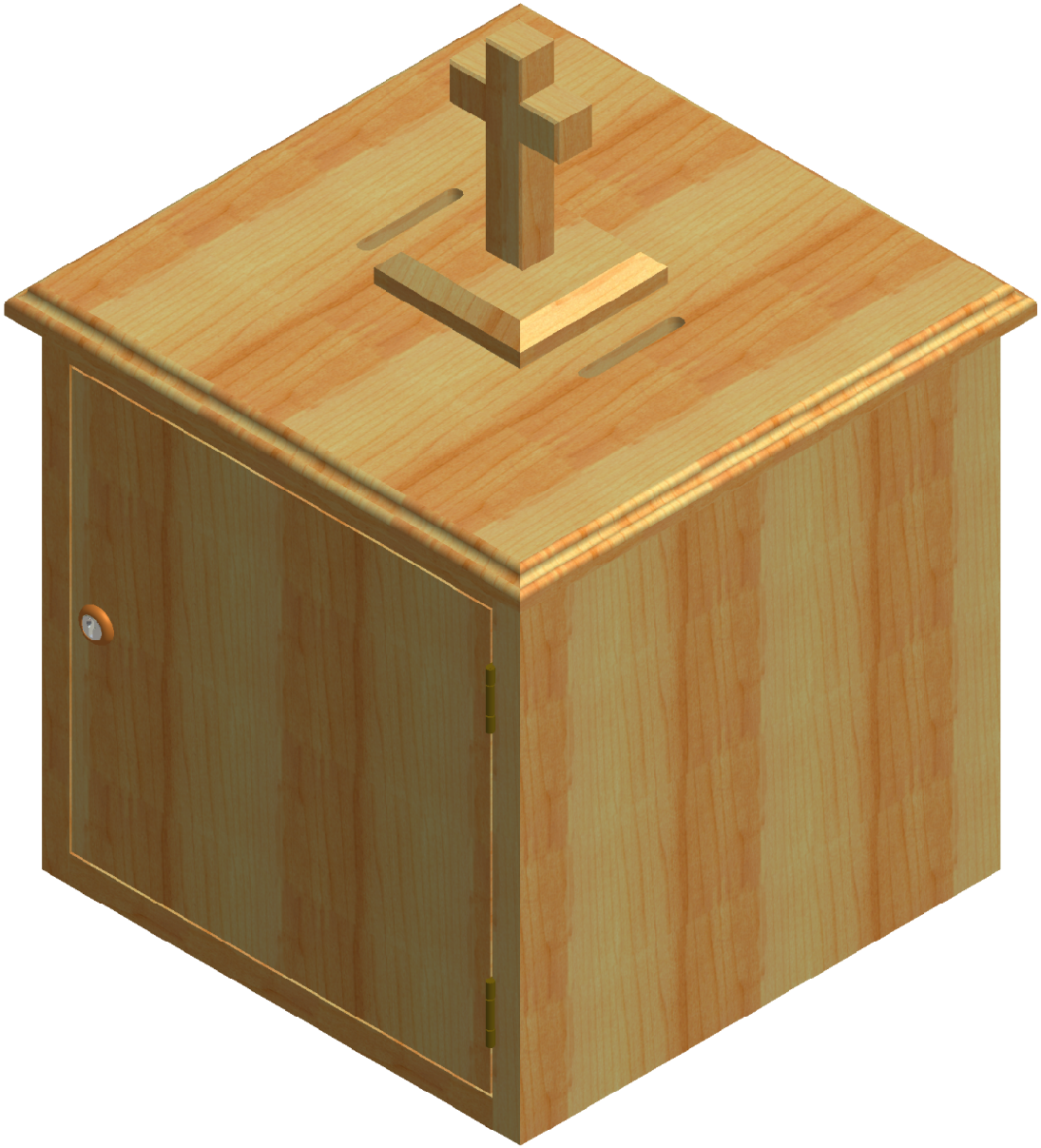

MATERIAL

Solid Red Oak wood
Felt pads
Threaded insert
Lock
Hinges

INDICATE PREFERENCE:

Stain Choice - Custom Wood Stock »
_____

Other » _____

Laminate - Color & Type »
_____

FCW2236	IPI Showroom		Bob Fairfax
8/31/2004	Customer Referral Number »50-04 07-37	CHSTCX0824040705	Kraig L. Behning
**Annotate changes regarding overall dimensions, location of accessories, etc. If no changes are required, please sign & date indicating approval of this design. Return by fax or e-mail.	*STAIN & FINISH OTHER THAN STOCK REQUIRES A $30.00 PER GALLON INCREASE IN COST. THIS MAY REQUIRE A DELAY IN DELIVERY OF UP TO 30 DAYS.	Tithe Box, Table-top	Weight: ~16 LBS 2 of 2
		- FOR CUSTOMER REVIEW - Not to be duplicated or shared without written permission from Plant Manager	
		Approved By:	
		Date Approved:	