Iowa Prison Industries
Custom Wood Shop
Anamosa, IA

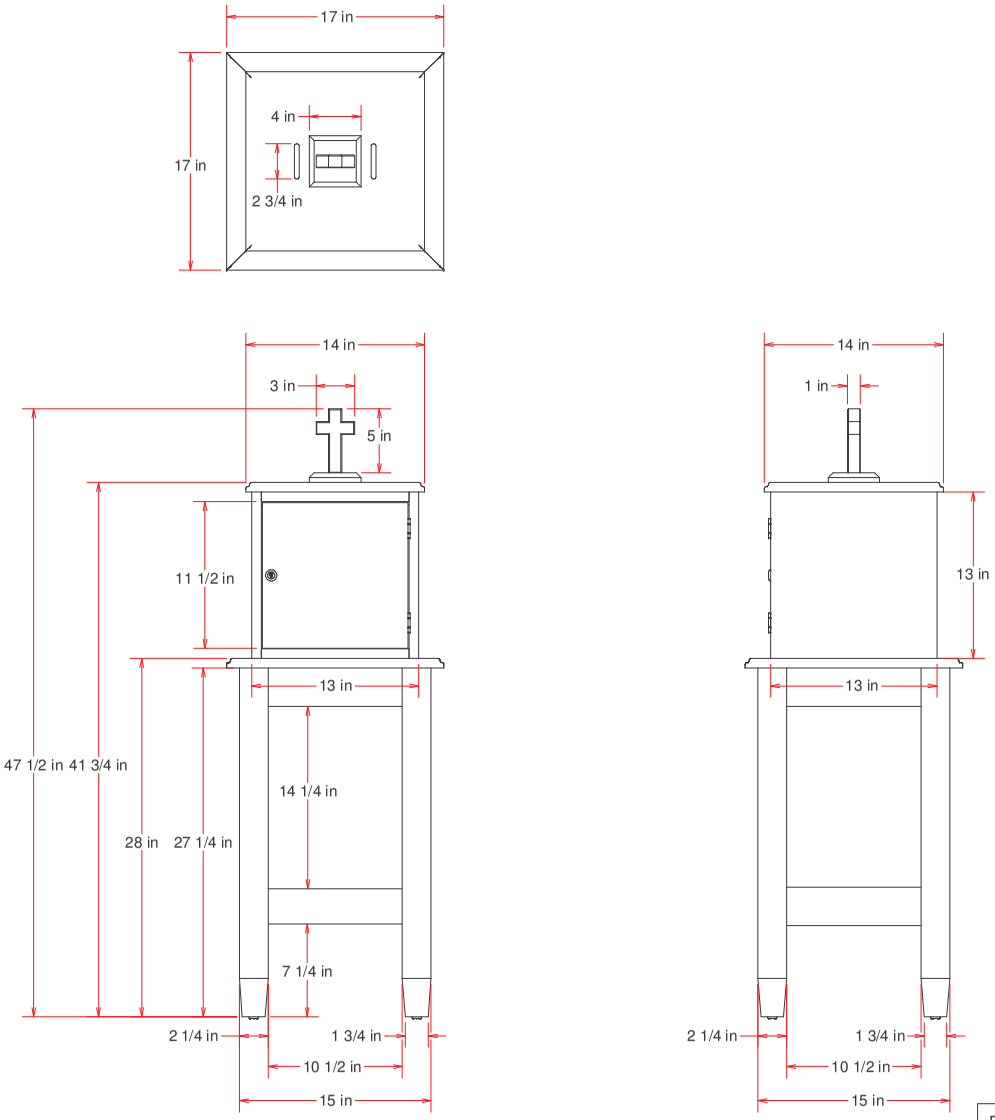

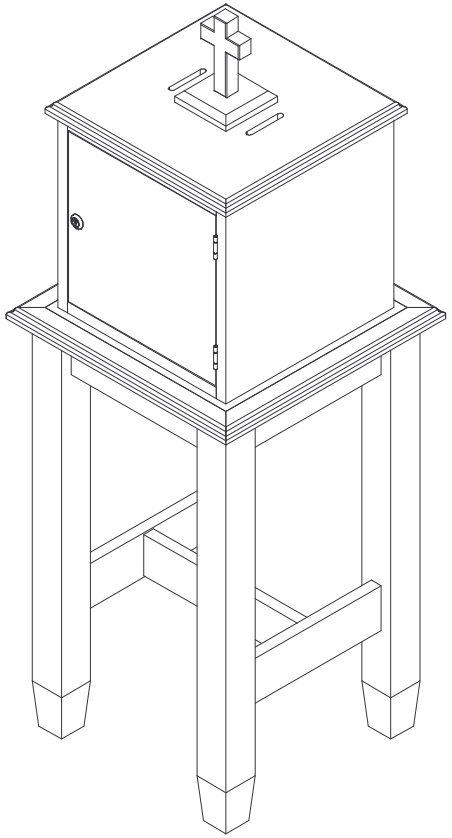

MATERIAL
Solid Red Oak wood 3/4" Red Oak plywood Dowels Tabletop fasteners Metal floor glides Threaded insert Lock Hinges

INDICATE PREFERENCE:

Stain Choice - Custom Wood Stock » _____

Other » _____

Laminate - Color & Type » _____

FCW2235	IPI Showroom		Bob Fairfax
8/31/2004	Customer Referral Number »50-04 06-37	CHSTCX0824040710	Kraig L. Behning
	Tithe Box, Freestanding	Weight: ~35 LBS	1 of 2

**Annotate changes regarding overall dimensions, location of accessories, etc.
If no changes are required, please sign & date indicating approval of this design.

Return by fax or e-mail.

*STAIN & FINISH OTHER THAN STOCK REQUIRES A $30.00 PER GALLON INCREASE IN COST.

THIS MAY REQUIRE A DELAY IN DELIVERY OF UP TO 30 DAYS.

- FOR CUSTOMER REVIEW -
Not to be duplicated or shared without written permission from Plant Manager

Approved By:

Date Approved:

Iowa Prison Industries
Custom Wood Shop
Anamosa, IA

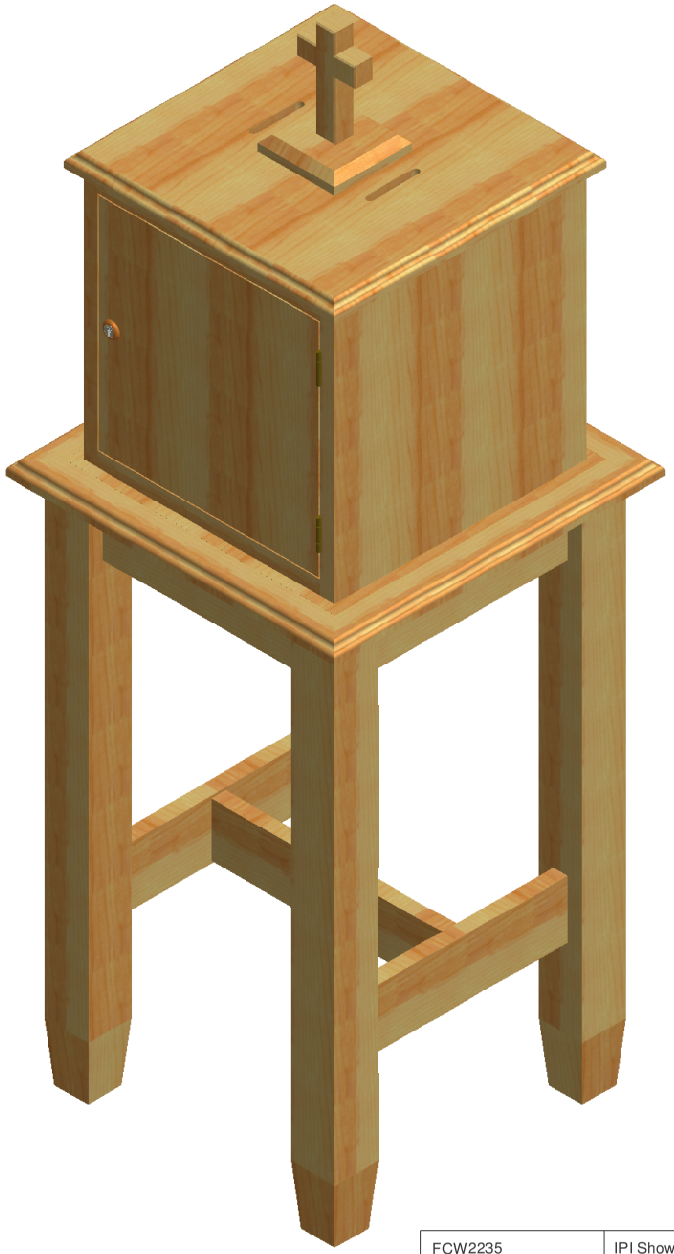

MATERIAL

Solid Red Oak wood
3/4" Red Oak plywood
Dowels
Tabletop fasteners
Metal floor glides
Threaded insert
Lock
Hinges

INDICATE PREFERENCE:

Stain Choice - Custom Wood Stock »
_____

Other » _____

Laminate - Color & Type »
_____

FCW2235	IPI Showroom		Bob Fairfax
8/31/2004	Customer Referral Number »50-04 06-37	CHSTCX0824040710	Kraig L. Behning
**Annotate changes regarding overall dimensions, location of accessories, etc. If no changes are required, please sign & date indicating approval of this design. Return by fax or e-mail.	*STAIN & FINISH OTHER THAN STOCK REQUIRES A $30.00 PER GALLON INCREASE IN COST. THIS MAY REQUIRE A DELAY IN DELIVERY OF UP TO 30 DAYS.	Tithe Box, Freestanding	Weight: ~35 LBS / 2 of 2
		- FOR CUSTOMER REVIEW - Not to be duplicated or shared without written permission from Plant Manager	
		Approved By:	
		Date Approved:	