Stand-Up Grills

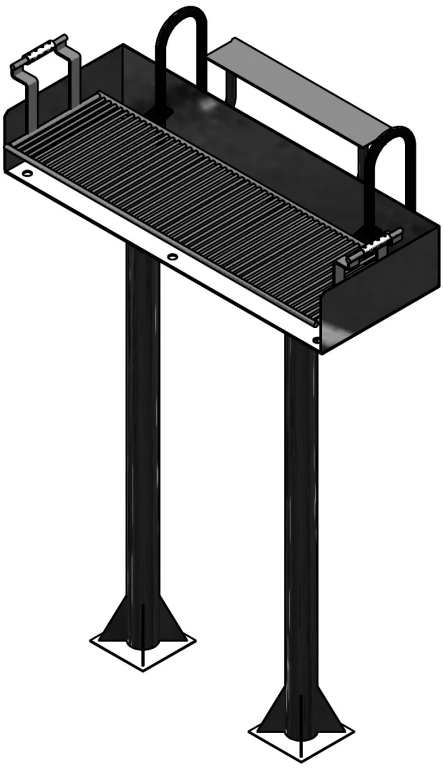

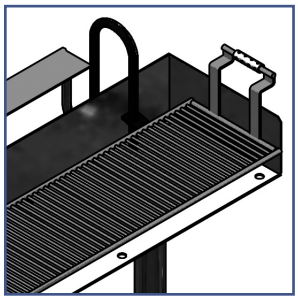

Offer an inexpensive way to provide cooking facilities for your park visitors

- Choose 24” wide or 48” wide grills
- Adjustable height grill with condiment tray
- In-ground mount standard
- Produced with heavy-gauge sheet steel
- Available in black only

Item	Model	Overall Size	Grill Size
Stand-Up Grill, Standard	FDNRRECGRILL	18”d x 24”w x 49”h	14.625”d x 18”w
Stand-Up Grill, Large	SPE1765	18”d x 51”w x 49”h	14.625”d x 47”w

IPI
Building Brighter Futures

Showroom & Sales Office:
1445 E Grand Avenue, Des Moines, IA 50316
800-332-7922 | **www.iaprisonind.com**