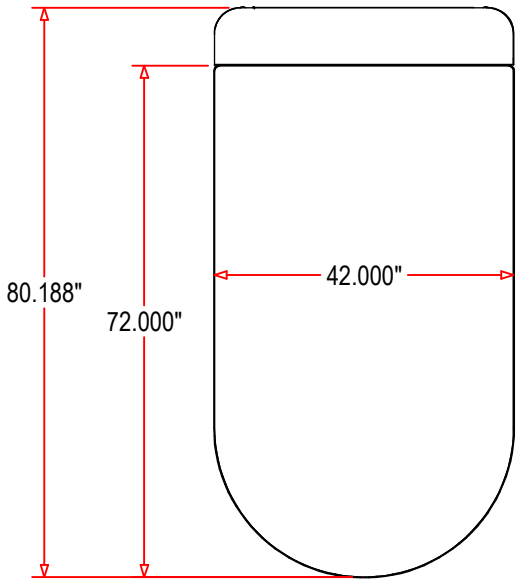

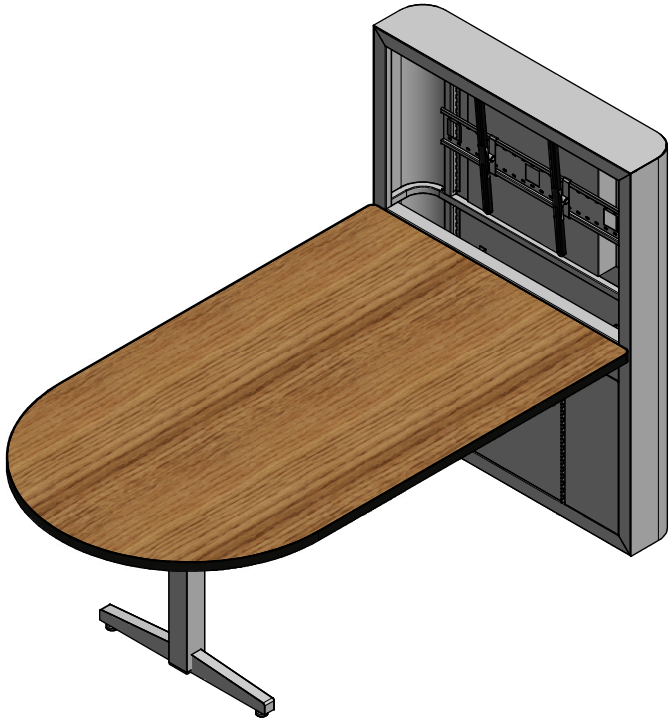

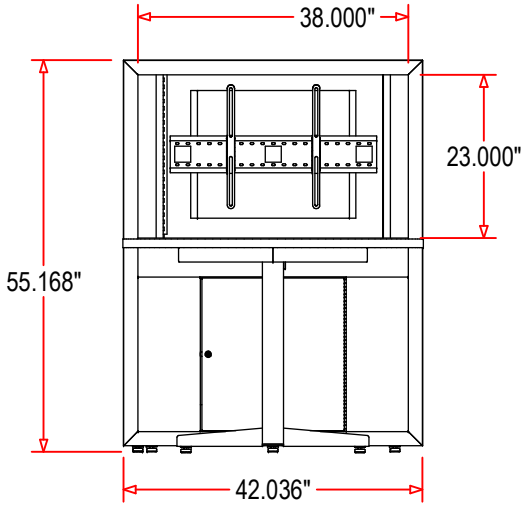

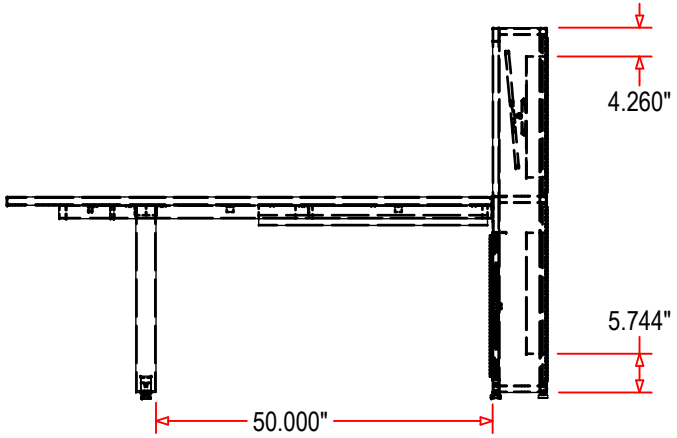

Customer: IPI SHOWROOM	Customers Approval By:	Date: 11/13/2013
Material & Inv. #: SEE B.O.M.	Description: 60"(W) x 85"(D) 62"(H) Stem Table	1 of 24
Drawn By: Magnus Havenstein Filename: 4086C.iam		
T:\VOL2\CAD\Draw\B1\4000's\4086 Sioux Center Misc\4086C\4086C.iam		

Property of Iowa Prison Industries, Metal Furniture Division.For customer review only . Not to be duplicated or shared without written permission from Plant Manager.