-MATERIALS

- RED OAK PLYWOOD, 1", COMBOCORE
- RED OAK, SELECT 4/4"
- GLIDE SWIVEL 1-1/4" AD/NYLON
- TEE NUT 1/4-20X1/2

45 DEGREE GRAIN DIRECTION.

Iowa Prison Industries
Ft. Madison Division
Ft. Madison, IA 52627
www.iaprisonind.com

DIMENSIONS ARE IN INCHES

STAIN AND FINISH OTHER THAN STOCK REQUIRES A $45.00 PER GALLON INCREASE IN COST. THIS MAY REQUIRE A DELAY IN DELIVERY OF UP TO 30 DAYS.

CUSTOMER: INDUSTRIES		**PROJECT REFERRAL #**	FWHITCRNHLCV
DIMENSIONS: 48"d x 48"w x 30"h		**F./FCW/SPE#**	
WEIGHT: 92.70		**CREATED DATE**	TUESDAY, SEPTEMBER 26, 2017 2:45:19 PM
STAIN COLOR: CUSTOMER SELECTION		**DRAWING REV DATE**	6/26/2019 8:42:10 AM
LAMINATE: CUSTOMER SELECTION		**DRAWN BY**	CHAD ENDERLE
ARCH REF:		**PRINT#**	1829

PROPRIETARY&CONFIDENTIAL
THE INFORMATION CONTAINED IN THIS DRAWING IS THE SOLE PROPERTY OF IPI. ANY REPRODUCTION IN PART OR AS A WHOLE WITHOUT THE WRITTEN PERMISSION OF IPI IS PROHIBITED.

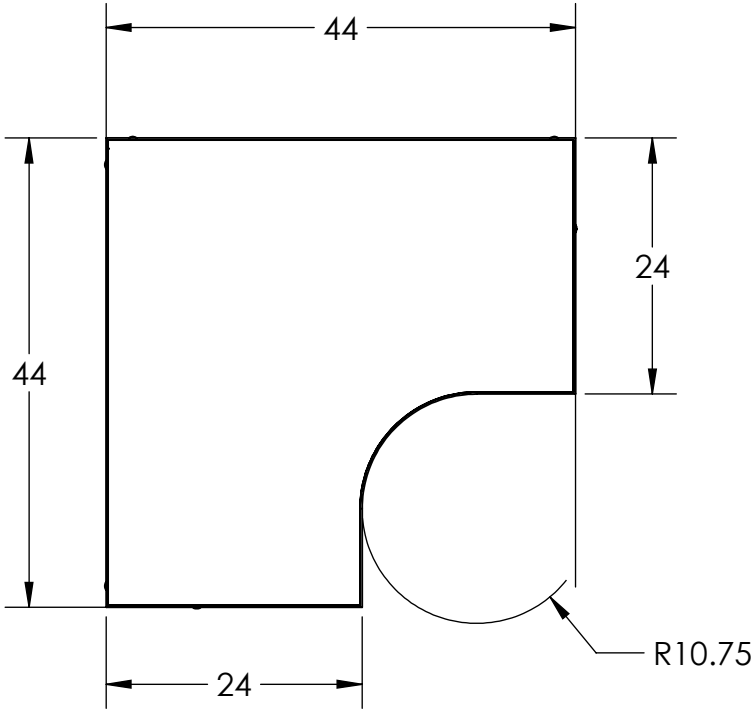

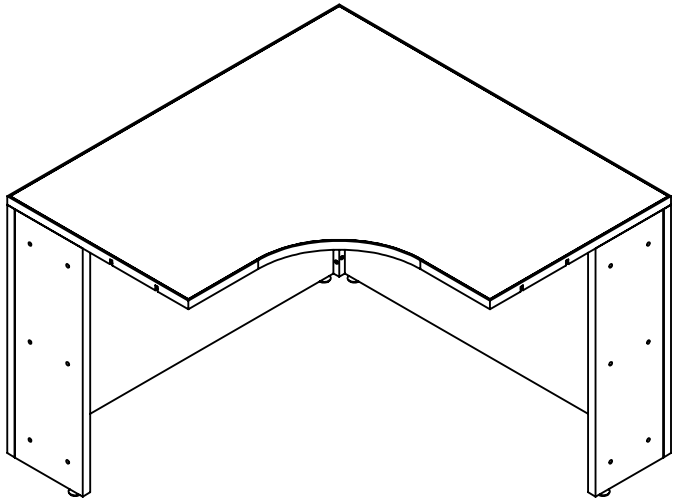

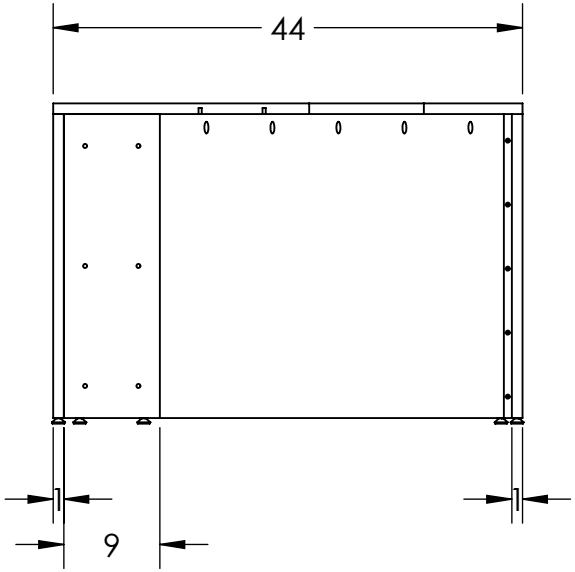

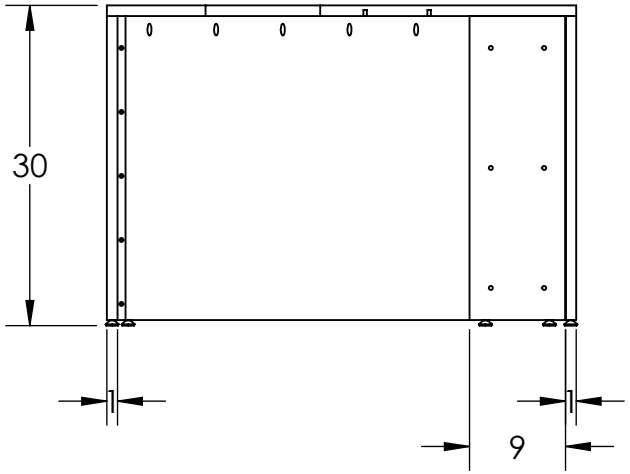

PROJECT REFERRAL#	FWHITCRNHLCV	**F./FCW/SPE#**		**CREATION DATE**	Tuesday, September 26, 2017 2:45:19 PM	**DRAWING REV**	6/26/2019 8:42:10 AM	**DRAWN BY**	CHAD ENDERLE

Ft. Madison Division

SHEET 2 OF 2